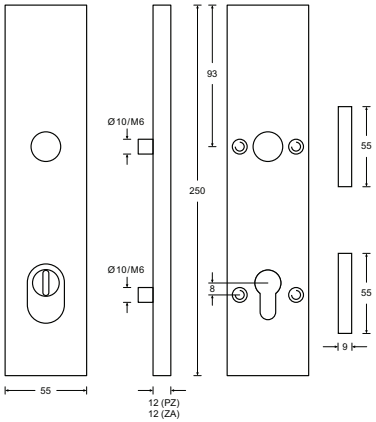

DIN EN 179 DIN 18273

HAFI security fitting – Design 522PZ/523ZA

Solid stainless steel security fitting
with long plate outside and rosettes inside,
invisible fixation, with knob and door handle

Protection class SK3 (ES2)

Spindle 8 mm, spindle 9 mm

PZ 92/72/55 (further keyholes on request)

1,000,000 movement cycles with certificate*
free movement < 1.0 mm
free angular movement < 1.0 mm

Classification key according to DIN EN 1906
4 7* - B 1 5 3 U

■ Satin stainless steel
□ Polished stainless steel

233K/522PZ F
233K/523ZA F

241K/522PZ F
241K/523ZA F

242K/522PZ F
242K/523ZA F

248K/522PZ F
248K/523ZA F

263/522PZ F
263/523ZA F

280/522PZ F
280/523ZA F

283/522PZ F
283/523ZA F

285/522PZ F
285/523ZA F

286/522PZ F
286/523ZA F

288/522PZ F
288/523ZA F

For all available door handle models – view page 451